Distribution Transformer Overload Monitoring Device

Yuting Leong

School of Electrical and Electronic Engineering

Western Power Corporation

Abstract

Monitoring the loading of distribution transformers can assist in improving the performance and reliability of a power network, and hence, the quality of the power distributed to customers. The absence of monitoring at distribution level in Western Power's network was attributed as one of the causes of the large number of failures of transformers in the summer of 2003/2004. This paper discusses the design of a device to facilitate real time monitoring and forecasting of the loading, top oil and hotspot temperatures of distribution transformers.

1.0 Introduction

Overloading of transformers beyond nameplate rating leads to a reduction of transformer life, and an increase in the risk of immediate failure. Current and temperature limitations for acceptable loading of distribution transformers beyond nameplate rating for short term emergency loading are 2.0 times the rated current, and 115'C for top oil temperature, and 160'C for hotspot temperature.

1.1 Motivation

The motivation for this project began in the summer of 2003/2004, when Western Power experienced large distribution level network problems, which saw the failure of over fifty distribution transformers. One of the causes attributed to the failure of so many distribution level transformers was the absence of monitoring of the distribution network. Market investigations revealed that the only devices available for monitoring of transformers were targeted at generation and transmission transformers and ranged in price from upwards of $2000. At distribution level, power transformers are relatively low cost (ranging in price from $10000 to $40000), and so the devices presently available on the market for transformer monitoring are not feasible for use on distribution transformers.

2.0 Objective

The objective of this project is to design a device which monitors overload conditions on a distribution level transformer. This device has the following constraints:

- The device is to be low cost
- Provide real time, online monitoring and alarming
- The device must be able to be fitted without any transformer down time

This device is to monitor the transformer's current and calculate top oil and hot spot temperatures, and emit different levels of alarms, when, for short-time emergency loading:

- It is predicted that in three, two and one hours, the transformer's current, top oil or hot spot temperature will reach a maximum acceptable limit.

- The transformer has reached the maximum acceptable limits for current, top oil or hot spot temperature.

3.0 Assumptions

The calculation of top oil and hotspot temperatures is based on the following assumptions:

- The current is distributed evenly across all three phases on a transformers, and so only one phase need be monitored.
- The average current over each hour is equal to the current measured at or forecasted for the start of each hour.
- The average ambient temperature over each hour is equal to the current measured at or forecasted for the start of each hour.

4.0 Methodology

4.1 Top Oil and Hotspot Temperature Monitoring

AS2374.7 – 1997 specifies that the top oil temperature for a distribution transformer should not exceed a temperature of 115° C, the hotspot temperature should not exceed 160°C, and the current should not exceed twice that of the nameplate rating under short term emergency loading conditions (short term emergency loading should be for no longer than 30 minutes). The top oil temperature rise over ambient for the ith interval $\theta_r(t_i)$ is calculated iteratively as follows [6]:

$$\theta_r(t_i) = \theta_r(t_{i-1}) + \left[\theta_{rfi} - \theta_r(t_{i-1})\right] \times \left\{1 - e^{-\frac{t_i - t_{i-1}}{\tau}}\right\}$$

Where $\theta_r(t_{i-1})$ is the top oil temperature rise for the previous interval, and θ_{rfi} is the ultimate top oil temperature at the loading in the ith interval, and is given by:

$$\theta_{rfi} = \Delta\theta_{or}\left(\frac{1 + dk_i^2}{1 + d}\right)^{\beta}$$

Where $\Delta\theta_{or}$ is the steady-state value for $\theta_r(t)$ when loading level is 1.0p.u (55°C), d is the ratio of full-load loss to no-load loss (5.00), k_i is the load factor for the ith interval, that is the ratio of ith interval load to rated load, and β is the oil temperature exponent(0.80) [6] [7] [8]. The values in brackets are the standard values for ONAN distribution transformers as per AS2374.7 [2] – 1997.

After several iterations, the value of $\theta_r(t_{i-1})$ can be assumed to be the same as the actual top oil temperature rise over ambient, and so, the formula may be rewritten as follows:

$$\theta_r(t_i) = \theta_a(t_{i-1}) \times e^{-\left(\frac{t_i - t_{i-1}}{\tau}\right)} + \theta_{rfi} \times \left[1 - e^{-\left(\frac{t_i - t_{i-1}}{\tau}\right)}\right]$$

Where $\theta_a(t_{n-1})$ is the actual top oil temperature rise over ambient of the previous interval.

Hence, the top oil temperature at time t $\theta_t(t)$ is given by:

$$\theta_t(t) = \theta_r(t) + \theta_A(t)$$

Where $\theta_A(t)$ is the ambient temperature, and $\theta_r(t)$ is the top oil temperature rise over ambient, as given previously.

The hotspot temperature is given an increase over the top oil temperature, proportional to the loading. The ultimate hotspot temperature θ_h as per AS2374.7 [2] – 1997 is given by:

$$\theta_h = \theta_A + \theta_{rf} + Hg_r k_i^y$$

Where H is the hotspot factor (1.1), g_r is the winding to oil temperature gradient (23 K) and y is the winding exponent (1.6) [2]. Together, Hg_rk_i make up the hotspot temperature over top oil temperature.

4.2 Load Forecasting

There are two basic classes of load forecasting techniques; static and dynamic models [3] [4] [5].

4.2.1 Static (Linear)

Static models are linear models where the inputs are mapped to an output via a linear function with static coefficients.

Time of Day

Time of day models use the previous periods' actual load patterns to predict current load patterns. The most basic time of day model follows the following equation which is essentially a weighted sum of explicit time functions:

$$L(t) = \sum_{i=1}^{N} \alpha_i f_i(t) + v(t)$$

Where α_i is the weight for the ith input, $f_i(t)$ is the transfer function for the ith input at time t, and v(t) is a white noise variable to account for the uncertainty in the load [4].

4.2.2 Dynamic (Non-Linear)

Dynamic models are non-linear mathematical models. Dynamic models are based on learning, and unlike static models, their coefficients are continually updated as new data is received. ANN (artificial neural network) and fuzzy logic models are the most common type of dynamic model used in load forecasting [1] [4] [5]. Previous, effective implementations of these models have utilised multiple input variables including demographic factors, seasonal conditions and weather conditions in addition to the time of day and previous loads. For a low cost, autonomous, generic device, the implementation of an ANN is impractical as it would require individually programming of each device to tailor for demographic factors, and real time relaying of variables such as seasonal data and current weather information. For these reasons, dynamic models have not been considered for the purposes of this device.

4.2.3 The Load Forecasting Model

The current model being studied for the forecasting of load is based on the previous day's loading. The forecasted load three hours after time t follows the following linear equation:

$$i(t+2) = i(t) + \Delta i_1 + \Delta i_2$$

Where $\Delta i_1 = i(t-23) - i(t-24)$ is the previous day's load change from hour t to hour t+1 in the previous day, and $\Delta i_1 = i(t-22) - i(t-23)$ is the previous day's load change from hour t+1 to hour t+2 in the previous day. Since this device will take hourly readings, it is assumed that the hourly average of the load is the same as the value at the start of the hour. At distribution level, loads can fluctuate significantly by the minute, however, it is unrealistic to try to accurately model this because these fluctuations are based on human behaviour and so are random in nature.

To compensate for the random nature of the loading, white noise v(t) was introduced into the model. This white noise was centred on the incremental loads and is given by;

$$v(t) = k_p * (\Delta i_1 + \Delta i_2)$$

where k_p represents the percentage of white noise.

So the final equation is given by:

$$i(t+2) = i(t) + \Delta i_1 + \Delta i_2 + v(t)$$

To account for the different load shapes on weekends and weekdays, the loading is split into weekends and weekdays, and if the current day is a weekday, the previous day's loading is taken from the last weekday (so Monday's figures are taken from the previous Friday's figures), and the same has been done for weekend loads.

4.2.3.1 Results Of Linear Load Forecasting Model

Calculating for thirteen days worth of weekend and weekday loads on five different transformers, it has been shown that the introduction of any noise has actually decreased the accuracy of the results. This can be seen in the tables on the following page. Graphically displaying the errors, we can see that in all but a few exceptional cases, the introduction of any white noise leads to an increase in the maximum and mean errors.

	Error with No Noise		Error with 1% Noise		Error with 5% Noise		Error with 10% Noise		Error with 20% Noise	
Transformer	max %	mean %	max %	mean %	max %	mean %	max %	mean %	max %	mean %
Mill St weekday	9.22	1.75	9.17	1.76	9.52	1.87	10.68	2.22	13.01	3.11
Mill St weekend	10.90	1.55	10.52	1.56	10.94	1.63	10.39	1.95	14.08	2.85
Bullcreek weekday	31.94	3.66	32.01	3.66	32.41	3.69	30.95	3.78	33.02	4.41
Bullcreek weekend	31.87	4.10	31.74	4.08	32.36	4.13	31.77	4.32	36.69	4.88
Manchester weekday	19.44	3.12	20.06	3.11	20.69	3.20	20.75	3.39	23.66	4.27
Manchester weekend	28.33	3.47	29.13	3.47	29.03	3.65	28.20	3.82	30.73	4.57
Scott 5 weekday	20.00	5.37	19.94	5.38	20.76	5.63	24.12	6.26	29.65	8.46
Scott 5 weekend	23.43	5.97	24.20	5.95	25.46	6.21	26.11	6.69	36.99	8.48
St Georges weekday	22.69	5.40	22.74	5.36	22.93	5.53	24.07	5.81	29.74	6.61
St Georges weekend	9.87	1.03	9.85	1.04	10.30	1.06	9.99	1.12	10.35	1.31

Figure 1.1 - Mean and maximum difference values between actual and forecasted top oil temperatures at different noise levels

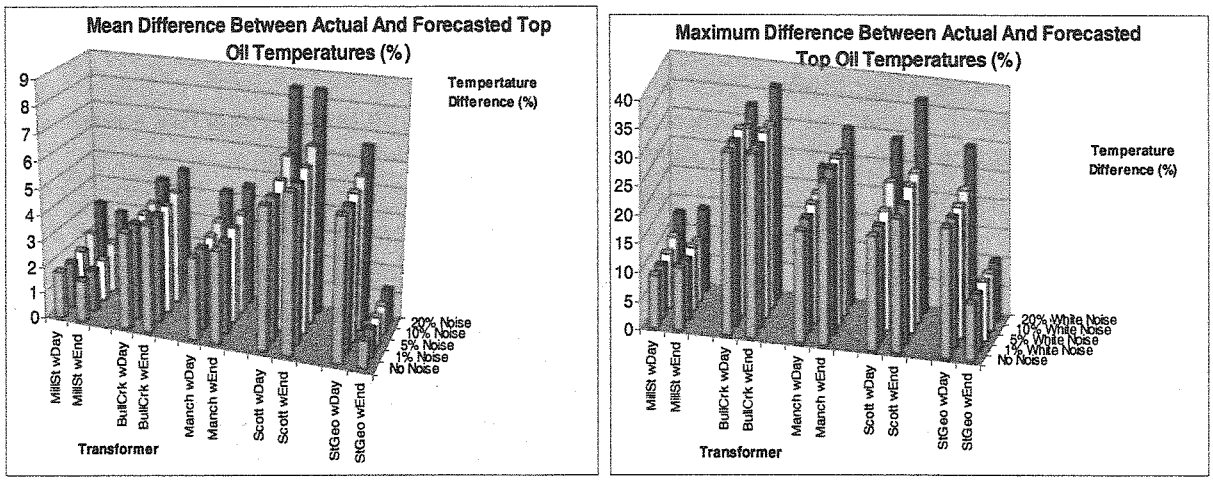

Figure 1.2 – Graphical representation of mean and maximum differences between actual and forecasted top oil temperatures at different noise levels

4.2.4 The Ambient Temperature Forecasting Model

Perth's temperature is very unpredictable, so the temperature model which I have developed is that of a modified sine wave. The calculated/modelled temperature curve for the ith interval is:

$$\theta_{ic} = \theta_{AV} \sin\left(\frac{2\pi}{24} i - m\pi\right) + \theta_{mavg}$$

The modelled temperature for the ith interval θ_{ia} is:

$$\theta_{ia} = \theta_{AV} \sin\left(\frac{2\pi}{24} i - m\pi\right) + \theta_{mavg} + (\theta_{ic} - \theta_{im})$$

Where θ_{AV} is the amplitude of the base sine curve and is given by $\theta_{AV} = \frac{1}{2} \times (\textit{average temperature range for the month})$ and m is the monthly scaling factor based on the time of sunrise, θ_{mavg} is the average temperature for the month, and θ_{im} is the actual measured temperature for that interval.

So the predicted temperature three hours in advance, $\theta_{(i+3)p}$, that is for the (i+3) interval is:

$$\theta_{(i+3)p} = \theta_{AV} \sin\left(\frac{2\pi}{24}(i+3) - m\pi\right) + \theta_{mavg} + (\theta_{ic} - \theta_{im})$$

The constants of the formula are calculated from the monthly averages as taken from the Bureau of Meteorology.

The following graph shows a series of hot days in January 2004. The green line being the actual temperature, and the blue, the temperature based on the linear model. Large errors are present in the mornings and evenings as the hourly increases and decreases are significant, but at the important times, when the temperature peaks, it can be seen that the predicted temperature is very close to the actual temperature, and importantly, is generally slightly above the actual, airing on the side of caution.

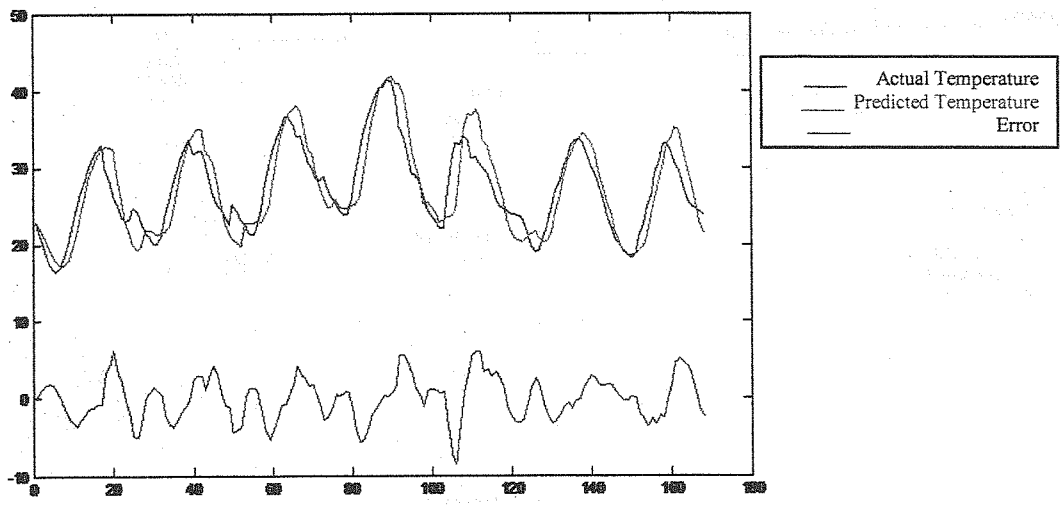

Fig. 2.1 Actual and predicted temperatures, and the temperature difference for the 8/1/04 to 14/1/04

5.0 Correlating External Tank Temperature and Top Oil Temperature

Based on these formulas, a first attempt at a model tried to correlate the external tank temperature to the internal top oil temperature. It was hypothesised that the top oil temperature would be equal to that of, or closely related by a linear relationship to the external tank temperature at the top of the

transformer. Field tests conducted on a hot day disproved this hypothesis. The top oil temperature from the transformer's temperature gauge and the tank temperature at the top of the tank near the gauge were recorded for four different distribution transformers in different physical orientations.

When analysing all cases, it became apparent that there was no direct relationship between the top oil, tank temperatures and ambient temperatures within the transformer. External, unmeasurable factors such as exposure to direct sunlight or shade had a significant influence in the temperature of the transformer's tank. Moreover, the temperature of the tank varied significantly when the temperature was taken from different areas of the tank, indicating uneven temperature distribution, most likely due to the position of the windings within the tank, and the orientation of the transformer with respect to the sun, and/or sources of shade.

Hence, this study showed that it was not possible to use the external tank temperature to ascertain the internal top oil temperature, and the top oil temperature would have to be calculated from the formula formed previously:

$$\theta_r(t_i) = \theta_a(t_{i-1}) \times e^{-\left(\frac{t_i - t_{i-1}}{\tau}\right)} + \theta_{rfi} \times \left[1 - e^{-\left(\frac{t_i - t_{i-1}}{\tau}\right)}\right]$$

6.0 The Device

The device is to take ambient temperature, current on one phase of the transformer, the hour of the day, and month of the year as inputs, calculate the present and predicted top oil and hotspot temperatures, and alarm if either temperature or current (present or predicted) exceed the allowable limits.

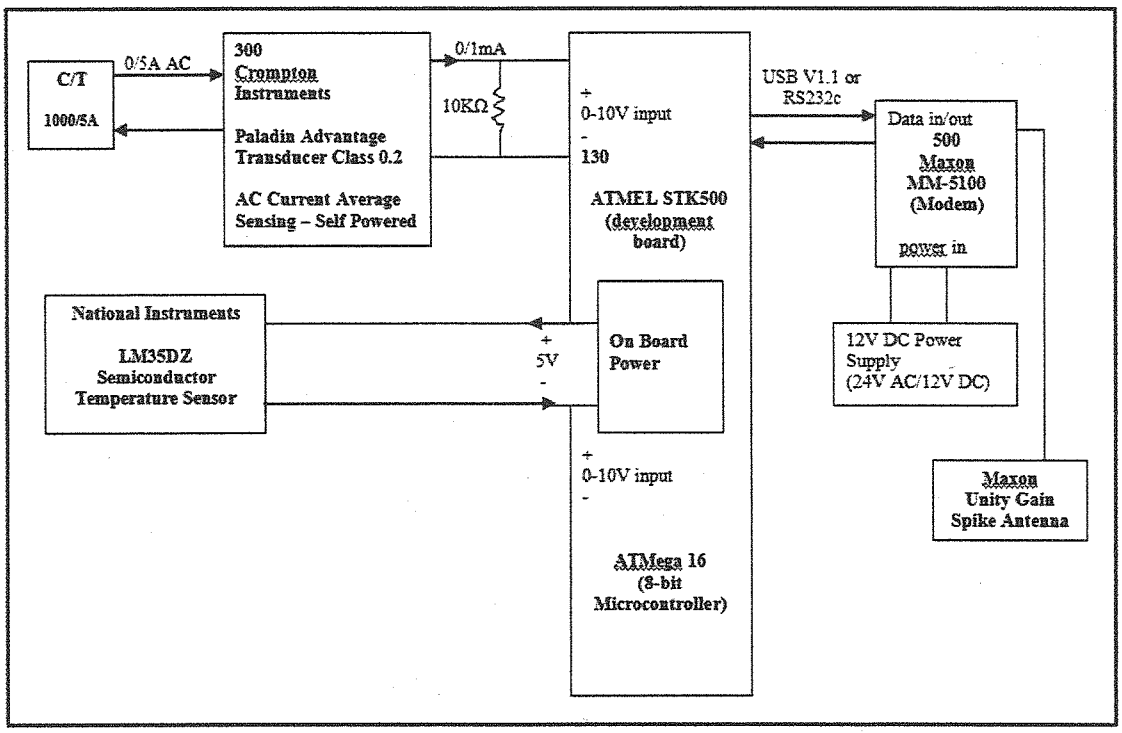

Fig. 4 – Device Layout

6.0.1 The Algorithm

The device implements an algorithm with the following flow diagram.

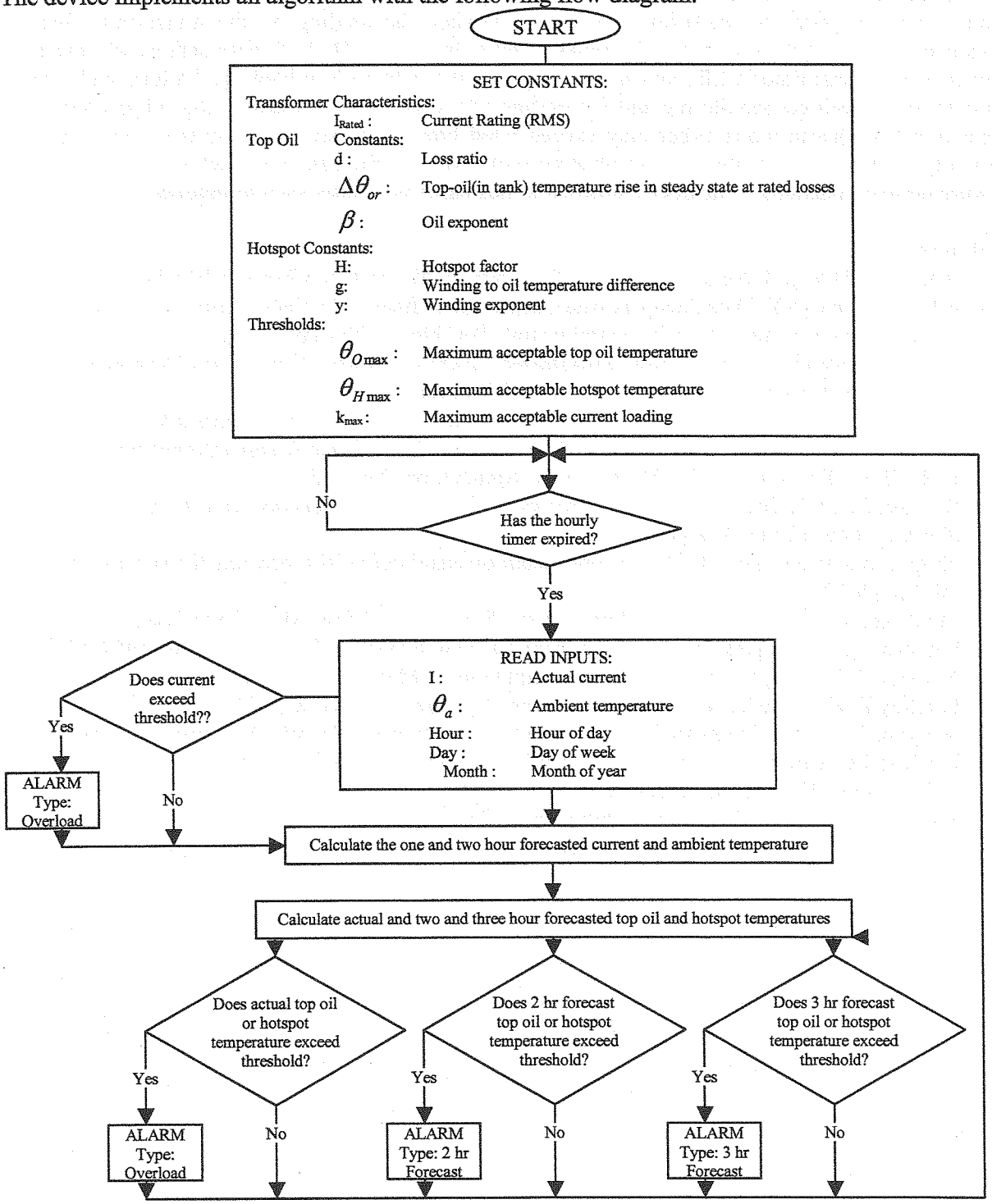

Fig. 5 – Logic diagram for the overload monitoring device.

7.0 Conclusion

By identifying the transformers which are operating at critically high loads, the flow of power within a network may be redistributed so as to aleviate the loading on the transformer under consideration, or the transformer may be replaced by a larger one. Both of these actions will extend an overloaded transformer's life, and hence, improve the network's reliability. Additionally, the ability to apply realtime monitoring and forecasting of a transformer's loading, top oil and hotspot temperature, and alarm when either may exceed rated limits is beneficial for critical loads where continuity of supply is essential. By implenting such a device, the data collected may also be used in future network planning. The device propsed in this paper facilitates such monitoring.

8.0 References

[1]. Anderson, D and McNeil, G. 1992, *Artificial Neural Networks Technology* [Online]. 1st Edition. Rome, NY: Data Analysis And Centre For Software. Available from: <http://www.dacs.dtic.mil/techs/neural/neural_ToC.html> [20 May 2005].

[2]. Australian Standard. 1997, *Power Transformers Part 7: Loading Guide For Oil-Immersed Power Transformers*. AS 2374.7-1997, AS, Homebush.

[3]. Feinberg, E., Genethliou D. 2005, 'Load Forecasting', in *Applied Mathematics for Restructured Electric Power Systems: Optimization, Control, and Computational Intelligence*, J. H. Chow, F.F. Wu, and J.J. Momoh, eds., Spinger, pp. 269-285.

[4]. Karady, G. 2001, *Short Term Load Forecasting Using Neural Networks And Fuzzy Logic* [Online]. PowerZone. Available from: <http://ceaspub.eas.asu.edu/PowerZone/LoadForecast/Load%20forecasting%20technics.htm> [30 March 2005].

[5]. Moghram, I., Rahman, S. 1989, 'Analysis and Evaluation of Five Short Term Load Forecasting Techniques, *IEEE Transactions On Power Systems,* Vol 4, No. 4. pp 1484-1491.

[6]. Nguyen, T.T. 1994, 'Developments In Computational Methods For Transformer Cyclic Loading Evaluations', *Electric Power Systems Research*, Vol 31, pp. 175-183.

[7]. Nguyen, T.T. 1994, 'Non-Iterative Solution For Transformer Thermal Response In Cyclic Loading Evaluations', *Journal of Electrical and Electronics Engineering Australia – IE Aust. & IREE Aust.* Vol. 14, No. 3, pp. 222-230.

[8]. Nguyen, T.T. 1995, 'Constrained Optimisation Procedure For Evaluating Cyclic Loading Of Power Transformers', *IEE Procdeedings-Generation, Transmission, Distribution.,* Vol 142, No. 3. pp 240-246.